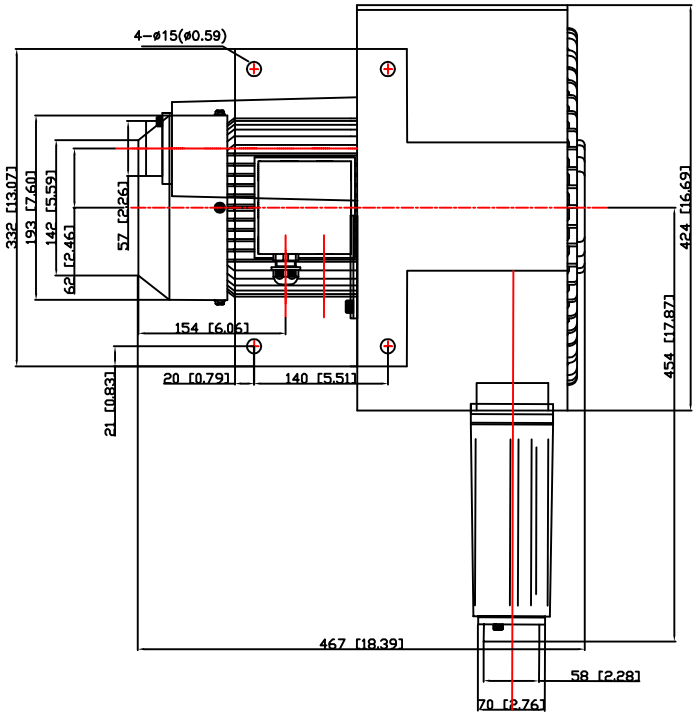

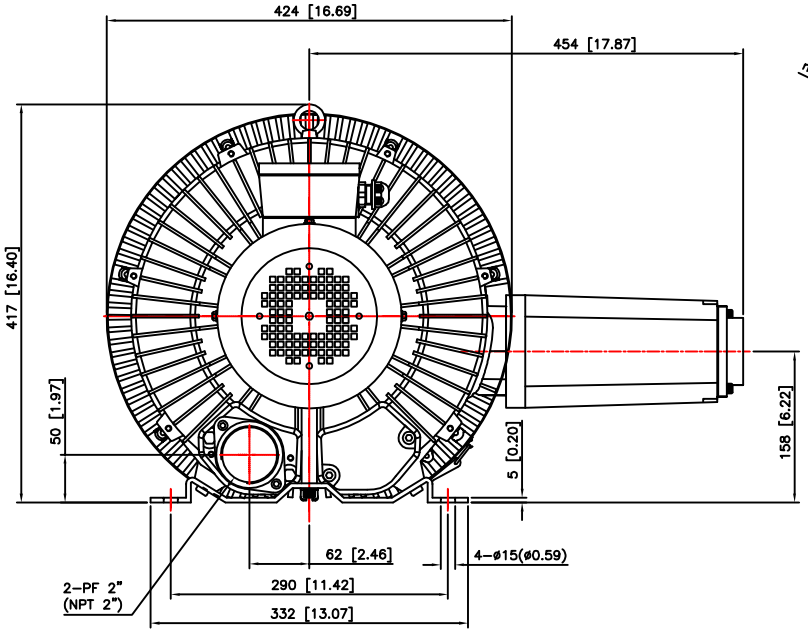

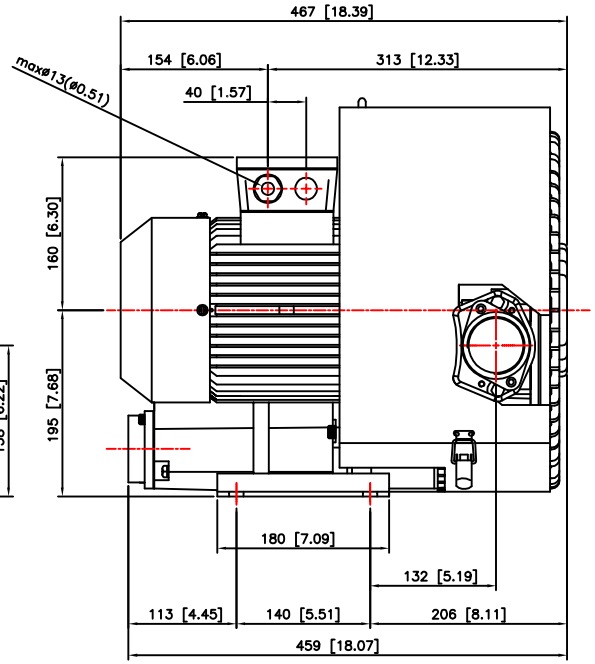

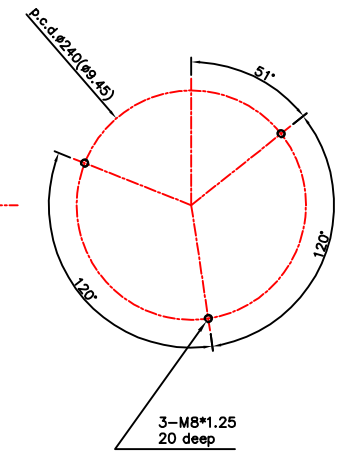

Note:
mm/ inches
Subject to change without notice

All Star Products Cleveland Ohio - Memphis Tennessee	**RB63 Series Assembly A** Regenerative Blower/Vacuum Pump	February 25, 2010